ITEM	DATE	REMARK	DESIGNED	APPROVED
1				
2				
3				

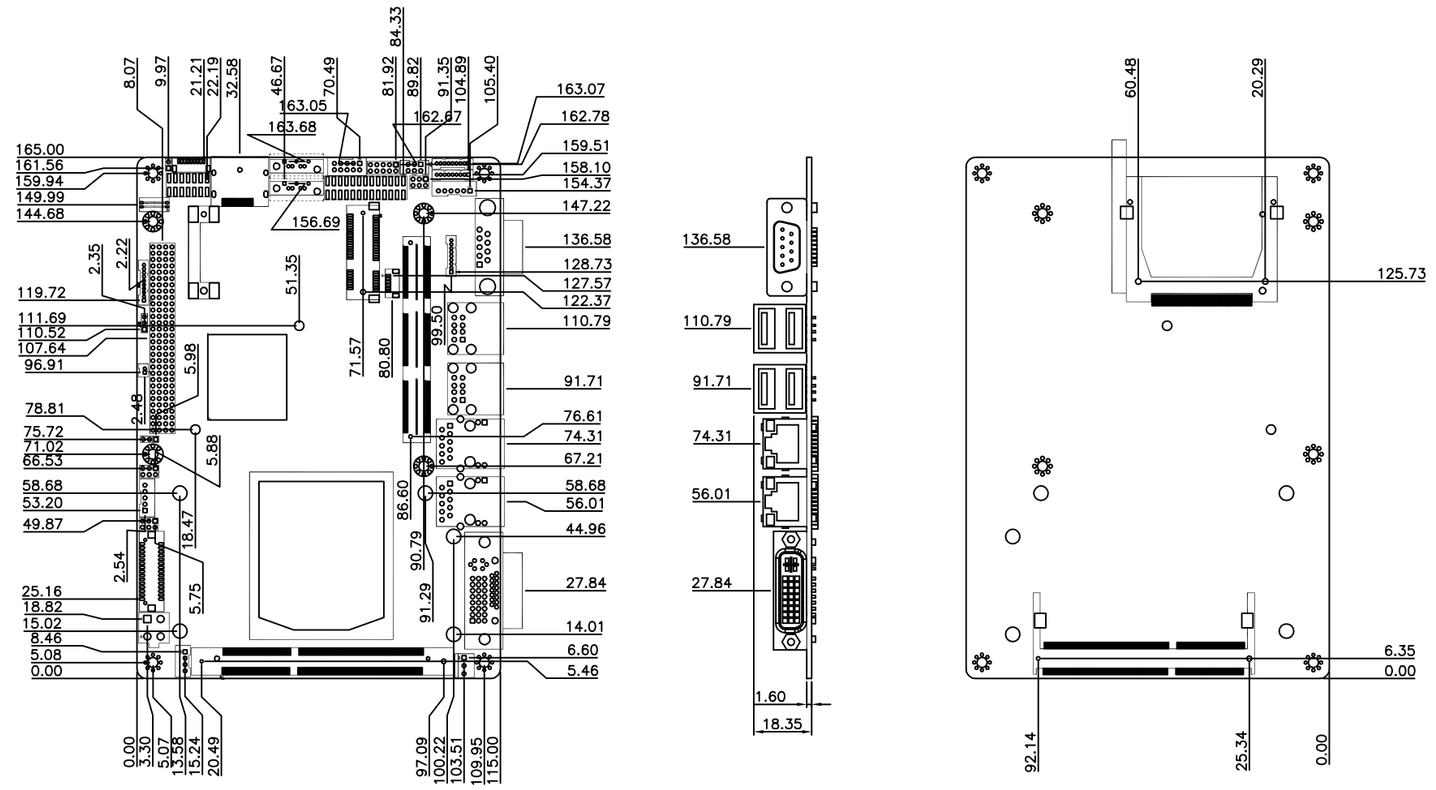

GENERAL TOL. >0 ±0.1 >10 ±0.2 >50 ±0.3 >200 ±0.5 >500 ±0.8	MATERIAL:	PART No. P/N:1907QM5703			AAEON Technology Inc. 研揚科技股份有限公司
	SPEC.: 1.6t	DWG No. P/N:1907QM5703			
	FINISH:	APPROVED	CHECKED	DESIGNED	NAME PCB DRAW
	UNIT: MM	WAYNE	GLEN WEN	TERRY HSU	MODEL No. EPIC-QM57
ANGLE TOL. ±0.5°	SCALE:1/1	20100930	20100930	20100930	REV. A1.0 SHEET: 1 / 1

ITEM	DATE	REMARK	DESIGNED	APPROVED
1				
2				
3				

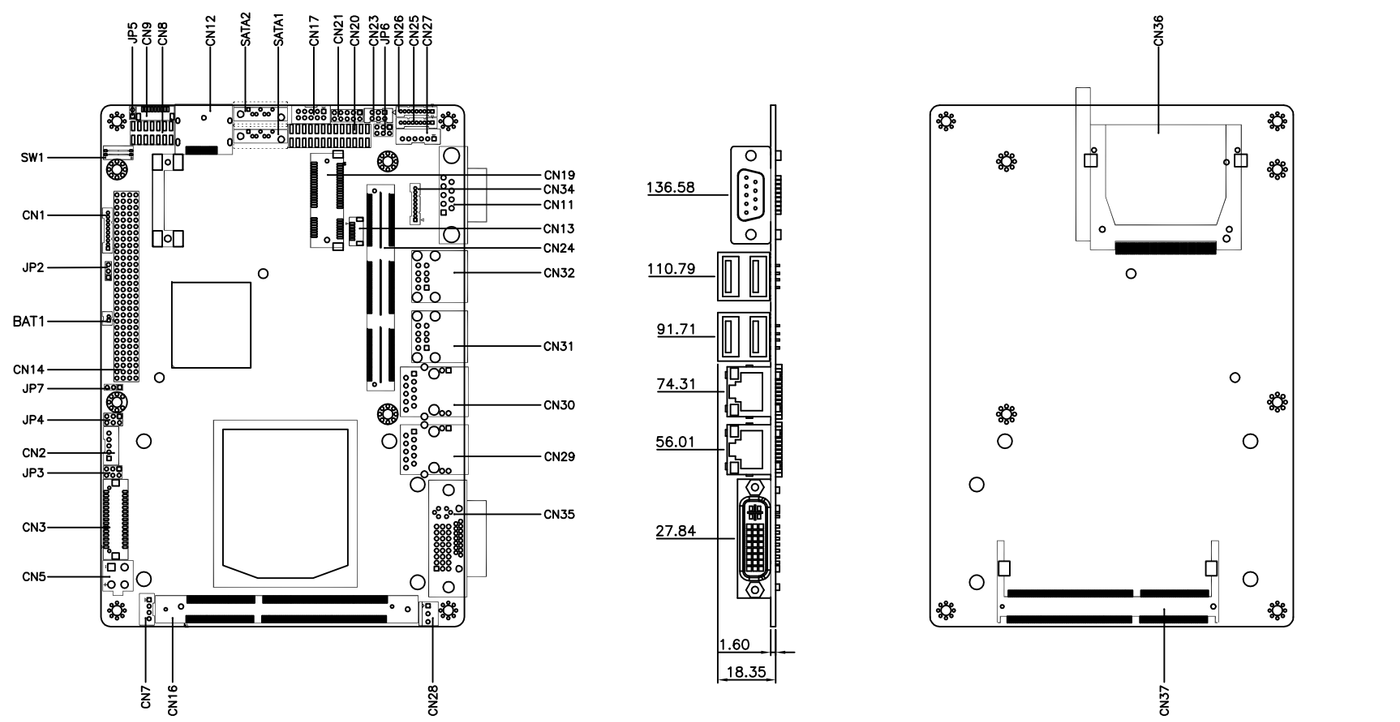

GENERAL TOL. >0 ±0.1 >10 ±0.2 >50 ±0.3 >200 ±0.5 >500 ±0.8	MATERIAL:	PART No. P/N:1907QM5703			AAEON Technology Inc. 研揚科技股份有限公司
	SPEC.: 1.6t	DWG No. P/N:1907QM5703			
	FINISH:	APPROVED	CHECKED	DESIGNED	NAME PCB DRAW
	UNIT: MM	WAYNE	GLEN WEN	TERRY HSU	MODEL No. EPIC-QM57
ANGLE TOL. ±0.5°	SCALE:1/1	20100930	20100930	20100930	REV. A1.0 SHEET: 1 / 1