Onyx-152

15" LCD PC with Expansion slot

Copyright Notice

This document is copyrighted, 2004. All rights are reserved. The original manufacturer reserves the right to make improvements to the products described in this manual at any time without notice.

No part of this manual may be reproduced, copied, translated, or transmitted in any form or by any means without the prior written permission of the original manufacturer. Information provided in this manual is intended to be accurate and reliable. However, the original manufacturer assumes no responsibility for its use, nor for any infringements upon the rights of third parties, which may result from its use.

The material in this document is for product information only and is subject to change without notice. While reasonable efforts have been made in the preparation of this document to assure its accuracy, AAEON, assumes no liabilities resulting from errors or omissions in this document, or from the use of the information contained herein.

AAEON reserves the right to make changes in the product design without notice to its users.

Acknowledgments

Intel® and Pentium® are registered trademarks of Intel® Corporation.

IBM, PC/AT, PS/2 are trademarks of International Business Machines Corporation.

Microsoft® Windows is a registered trademark of Microsoft® Corporation.

RTL is a trademark of Realtek Semi-Conductor Co., Ltd.

C&T is a trademark of Chips and Technologies, Inc.

UMC is a trademark of United Microelectronics Corporation.

ITE is a trademark of Integrated Technology Express, Inc.

SiS is a trademark of Silicon Integrated Systems Corp.

VIA is a trademark of VIA Technology, Inc.

All other product names or trademarks are properties of their respective owners.

Packing List

Before you begin installing your Panel PC, please make sure that the following items have been shipped:

- Onyx-152 series Medical Panel PC
- CD-ROM

  Contains User's Manual (in PDF format), Drivers and Utilities
- Accessories
  - Screws bag
  - Jumper packbag
  - PCI Riser card

If any of these items are missing or damaged, you should contact your distributor or sales representative immediately.

Safety & Warranty

1. Read these safety instructions carefully.
2. Keep this user's manual for later reference.
3. Disconnect this equipment from any AC outlet before cleaning. Do not use liquid or spray detergents for cleaning. Use a damp cloth.
4. For pluggable equipment, the power outlet must be installed near the equipment and must be easily accessible.
5. Keep this equipment away from humidity.
6. Put this equipment on a reliable surface during installation. Dropping it or letting it fall could cause damage.
7. The openings on the enclosure are for air convection. Protect the equipment from overheating. DO NOT COVER THE OPENINGS.
8. Make sure the voltage of the power source is correct before connecting the equipment to the power outlet.
9. Position the power cord so that people cannot step on it. Do not place anything over the power cord.
10. All cautions and warnings on the equipment should be noted.
11. If the equipment is not used for a long time, disconnect it from the power source to avoid damage by transient over-voltage.
12. Never pour any liquid into an opening. This could cause fire or electrical shock.
13. Never open the equipment. For safety reasons, only qualified service personnel should open the equipment.

14. If any of the following situations arises, get the equipment checked by service personnel:
    a. The power cord or plug is damaged.
    b. Liquid has penetrated into the equipment.
    c. The equipment has been exposed to moisture.
    d. The equipment does not work well, or you cannot get it to work according to the users manual.
    e. The equipment has been dropped and damaged.
    f. The equipment has obvious signs of breakage.
15. DO NOT LEAVE THIS EQUIPMENT IN AN UNCONTROLLED ENVIRONMENT WHERE THE STORAGE TEMPERATURE IS BELOW -20° C (-4° F) OR ABOVE 60° C (140° F). IT MAY DAMAGE THE EQUIPMENT.

16. External equipment intended for connection to signal input/output or other connectors, shall comply with relevant UL / IEC standard (e.g. UL 60950 for IT equipment and UL 2601-1 / IEC 60601 series for medical electrical equipment). In addition, all such combinations – systems – shall comply with the standard IEC 60601-1-1, Safety requirements for medical electrical systems. Equipment not complying with UL 2601-1 shall be kept outside the patient environment, as defined in the standard.

Caution:

It may cause the danger of explosion if battery is incorrectly replaced. Replace only with same or equivalent type recommended by the manufacturer.

Classification

1. Degree of production against electric shock: not classified
2. Degree of protection against the ingress of water: IPX0
3. Equipment not suitable for use in the presence of a flammable anesthetic mixture with air or with oxygen or nitrous oxide.
4. Mode of operation: Continuous
5. Type of protection against electric shock: Class I equipment

FCC Safety

This device complies with Part 15 FCC Rules. Operation is subject to the following two conditions: (1) this device may not cause harmful interference, and (2) this device must accept any interference received including interference that may cause undesired operation.

UL Module Description

	Onyx-152 AC module is developed to suitable for the Classification Mark requirement
	Onyx-152 DC module is developed to suitable for the Recognized Component Mark requirement

Safety Symbol Description

The following safety symbols are the further explanations for your reference.

	Medical equipment with respect to electric shock, fire and mechanical hazards only in accordance with UL 60601-1, and CAN/CSA C22.2 NO. 601.1
	Onyx-152 DC module is developed to suitable for the Recognized Component Mark requirement
	Danger of explosion if the system is on running.
	Ground wire **Protective Ground wire.**

Contents

Copyright Notice 2
Acknowledgments 3
Packing List 4
Safety & Warranty 5
Classification 7
FCC Safety 8
UL Module Description 9
Safety Symbol Description 10
General Information 13
Introductions 14
Features 15
Specifications 16
LCD Specifications 18
Power Supply 18
Environmental Specification 19
Touchscreen (optional) 19
Dimensions 20
Hardware Installation 21
Removing the rear maintenance cover 22
Mounting Installation 24
Jumper Setting & BIOS Installation 25
CPU card – PCM-6892 26
Drivers Installation 27
CPU Card – PCM-6892 29

Miscellanea 30
General Cleaning Tips 31
Cleaning tools.....32
Scrap Computer Recycling.....34

Chapter 1

General Information

Introductions

The Onyx-152 is the flagships of AAEON's medical grade PC. The high brightness LCD, fanless solution, integrated multimedia functions and extensive expansion options make them the perfect platform upon which to build comprehensive lifestyle computing applications.
The Onyx-152 includes all the features of a powerful computer into a slim and attractive chassis. The Onyx-152 model has a 15" TFT display with 1024 x 768 resolution. It accommodates one 2.5" hard disk drive and up to 512MB DRAM. Meanwhile, this model owns side-mounted slim floppy disk, slim CD-ROM, and CompactFlash card & PCMCIA card bus.

The Onyx-152 is a compact, all-in-one network compatible PC with full safety and medical approval and features to control a dedicated system with a wide variety of applications. Combining the Onyx-152 into your system can achieve both cost-saving and efficient improvements. Common applications include point of sale systems, healthcare utility, interactive information displays, automation control systems, general desktop use, multimedia recreation, and other medical requirements.

Features

- 15" high brightness color TFT LCD display
- Aluminum alloy front panel
- VIA Eden667MHz fanless CPU on board, System memory up to 512 DRAM
- Medical certification EN 60601-1-1 and UL 2601
- CE\FCC Class B certification
- Disk Drive bay for Slim CD-ROM, Slim FDD and 2.5" HDD
- Support CF and PCMCIA card
- Brightness control on button
- Resistive touch screen (Optional)

Features of PCM-6892 (VIA Eden CPU on board fanless compact board)

- VIA Eden 667 MHz CPU on Board with FSB 66/100/133 MHz
- One 10/100Base-T Fast Ethernet
- Integrated AC-97 2.1
- Supports Type II CompactFlash™ Memory
- Supports two Types II PCMCIA Slots
- Supports CRT and 18/36-bit TFT panels

Specifications

- **Construction:** Heavy-duty steel chassis and aluminum alloy front panel
- **Display:** 15" XGA (1024 x 768) color TFT LCD
- **CPU:** VIA Eden 667 MHz CPU on Board with FSB 66/100/133 MHz
- **Chipset:** VIA VT8606 shared memory up to 32 MB SDRAM
- **Memory:** Support up to 512MB
- **Network (LAN):** 10/100 Base-TX Ethernet port
- **Audio:** VIA VT1616, AC 97 2.1 Codec
- **I/O ports:** 3 external serial ports:
  2 x RS-232,
  1 x RS-232/422/485 and
  1 parallel port (supports EPP/ ECP)
  1 PS/2 keyboard, 1 mouse interface
- **Disk Drive Housing:** 2.5" HDD, slim FDD and slim CD-ROM

- **USB connector:** V1.1 USB ports x 2
- **Mounting:** Desktop stand
  Optional: Desktop, tilting desktop, swivel arm
- **Expansion slots:** One PCI slot
- **Power supply:** Universal 65W medical switching power supply or 24V DC in power supply with hole system medical approve.
- **OS Support:** MS DOS, Windows 98/SE, Windows NT, Windows 2000, Windows XP
- **Dimension (W x H x D):** 420 x 334 x 87mm (16.5" x 13.1" x 3.5")
- **Carton Dimension (W x H x D):** 556 x 516 x 335 mm (21.9" x 20.3" x 13.2")
- **Gross Weight:** 11.2Kg; 7.2Kg (without Desktop stand)

LCD Specifications

Display type	15" color TFT LCD
Max. Resolution	1024 x 768
Max. Colors	262K
Dot size (mm)	0.297 x 0.297
Luminance (cd/m²)	250 (TYP)
Viewing angle	140 (H)
	160 (V)
Operating temperature	0 ~ 50°C (32~122°F)
Brightness Control	Yes
Back Light MTBF (Hrs)	30,000

Note: All AAEON's LCD products are manufactured with High precision technology. However, there are a small number of defective pixels in all LCD panels that are not able to change color. This is a normal occurrence for all LCD displays from all manufacturers and should not be noticeable or objectionable under normal operation. AAEON LCD panels are qualified for industry standard conditions in the following: total 7 dead pixels on a screen or if there are 3 within 1 inch square area of each other on the display.

Power Supply

Input Voltage: 100-250V AC

Input Current: 2A (AC in 115 V), 1.5A (AC in 230 V)

Frequency: 47~63 Hz

24V DC – 70W 24V DC-DC (optional)

Input Range: 10~30VDC

Input Current: 13A (DC in 12V)

Note: The system is develop to suit for Class I, Not Classified

Environmental Specification

- **Operating temperature**: 0 °to 40°C (32~104°F)
- **Storage temperature**: -20 °to 60°C (-4~140°F)
- **Storage humidity**: 5 to 90%, non-condensing
- **Vibration**:

  10 to 150 Hz, 0.075mm peak to peak (operation)

  10 cycles (sweep): 1 oct/min (endurance)
- **Shock**: 15G peak acceleration (11 msec. duration)
- **EMC**: CE/FCC Class B
- **Safety**: EN 60601-1-1, UL 2601

Touchscreen (optional)

- **Type**: 5/8-wire, analog resistive
- **Resolution**: 1024 x 768
- **Light transmission**: 75%
- **Lifetime**: 1 million activations
- **Controller**: RS-232 interface

Dimensions

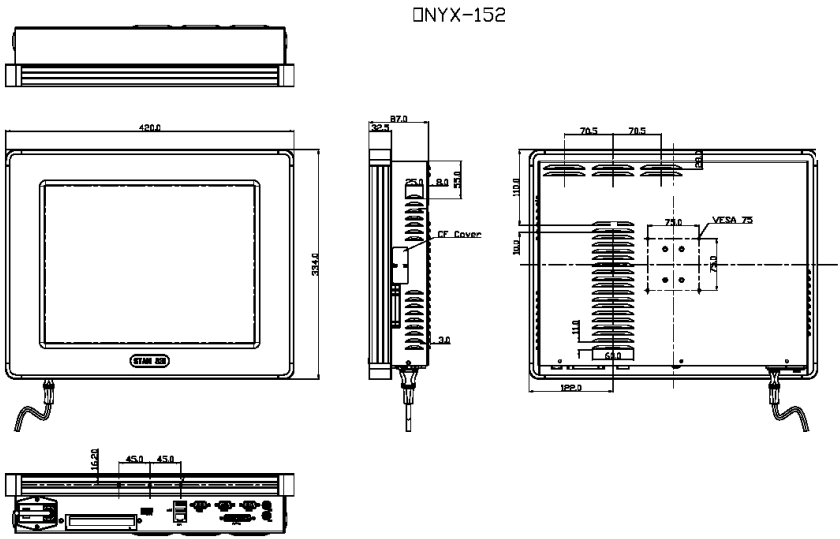
ONYX-152
420.0
334.0
87.0
32.5
25.0
8.0
55.0
CF Cover
3.0
70.5
70.5
110.0
10.0
75.0
VESA 75
75.0
11.0
63.0
122.0
16.20
45.0
45.0

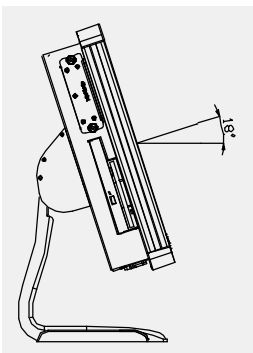
18°

Chapter 2

Hardware Installation

Removing the rear maintenance cover

1. Unscrew the four attachment screws and then remove the base of stand.

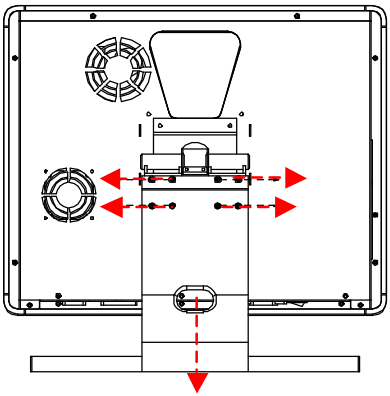

Caution:

Handle the desktop stand with care, since it is made of aluminum and is weight 3kilogram.

1. Remove the stand holder by unscrewing the four attachment screws.

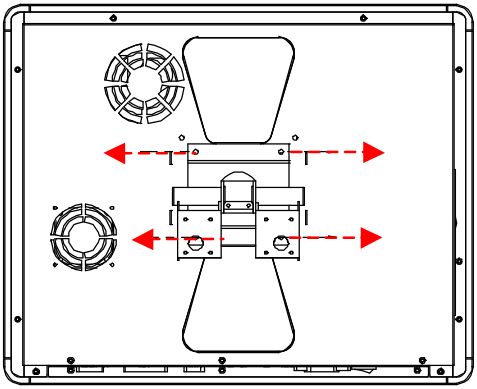

2. Unscrew the ten attachment screws used to hold the rear maintenance cover.

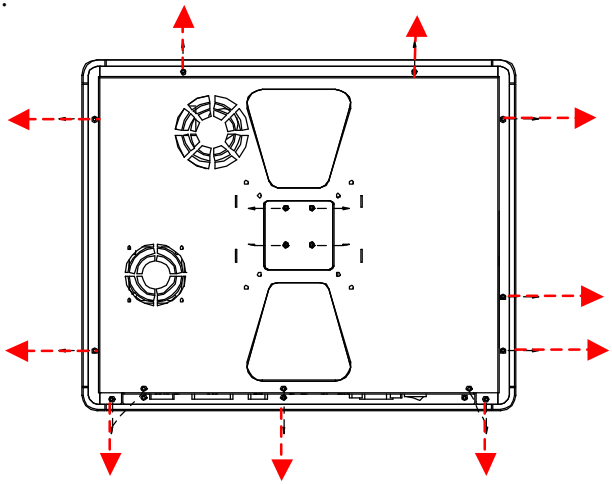

3. Remove the rear maintenance cover.

Mounting Installation

Onyx-152 is suitable for VESA75/100mm interface pads for arm mounting or desktop stand. Onys-152 provides optional mounting kit for VESA75mm.

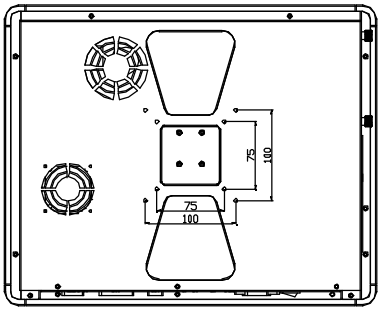

Desktop Stand (optional mount kit: STAND-158D00)

ARM mounting (ARM-LA0115 is for arm mounting)

Chapter

3

Jumper Setting & BIOS Installation

CPU card – PCM-6892

PCM-6892 CPU card is built in Onyx-152 Panel PC series.

In regard to Jumper setting and BIOS, please refer to User manual of PCM-6892.

(Manual: // CPU card / PCM-6892)

Chapter

4

Drivers Installation

The Onyx-152 comes with a CD that contains most of the drivers and utilities of your needs.

There are several ways of installation depending on the driver package under different Operating System application.

We recommend that the system driver installation procedure must be performed first.

If you utilize Windows NT series OS, you are strongly recommended to download the latest version Windows NT Service Pack from Microsoft website and install it before installing any driver.

As for the rest of Drivers Installations of CPU cards, please refer to the individual manual for each CPU cards.

In regard to Touchscreen installation, please refer to the Excel file: **ReadMe_All-Prods-Touch-list.xls** to find out the right touchscreen type and follow the installation guide in respective folders.

Note: Onyx-152 provides optional Dynapro Resistive Touch.

CPU Card – PCM-6892

PCM-6892 CPU card is built in Onyx-152 Panel PC series.

In regard to Drivers Installation, please refer to User manual of PCM-6892.

(Manual: // CPU card / PCM-6892)

Appendix A

Miscellanea

General Cleaning Tips

You may need the following precautions before you begin to clean the computer. When you clean any single part or component for the computer, please read and understand the details below fully.

1. Never spray or squirt the liquids directly onto any computer component. If you need to clean the device, please rub it with a piece of dry cloth.
2. Be cautious of the tiny removable components when you use a vacuum cleaner to absorb the dirt on the floor.
3. Turn the system off before you start to clean up the component or computer.
4. Never drop the components inside the computer or get circuit board damp or wet.
5. Be cautious of all kinds of cleaning solvents or chemicals when you use it for the sake of cleaning. Some individuals may be allergic to the ingredients.
6. Try not to put any food, drink or cigarette around the computer.

Cleaning tools

Although many companies have created products to help improve the process of cleaning your computer and peripherals users can also use household items to clean their computers and peripherals. Below is a listing of items you may need or want to use while cleaning your computer or computer peripherals.

Keep in mind that some components in your computer may only be able to be cleaned using a product designed for cleaning that component, if this is the case it will be mentioned in the cleaning tips.

- **Cloth** - A piece of cloth is the best tool to use when rubbing up a component. Although paper towels or tissues can be used on most hardware as well, we still recommend you to rub it with a piece of cloth.
- **Water or rubbing alcohol** – You may moisten a piece of cloth a bit with some water or rubbing alcohol and rub it on the computer. Unknown solvents may be harmful to the plastics parts.
- **Vacuum cleaner** - Absorb the dust, dirt, hair, cigarette particles, and other particles out of a computer can be one of the best methods of cleaning a computer. Over time these items can restrict the airflow in a computer and cause circuitry to corrode.
- **Cotton swabs** - Cotton swaps moistened with rubbing alcohol or water are excellent tools for wiping hard to reach areas in your keyboard, mouse, and other locations.
- **Foam swabs** - Whenever possible it is better to use lint free swabs such as foam swabs.

Note:

We strongly recommended that you should shut down the system before you start to clean any single components.

Please follow the steps below.

1. Close all application programs.
2. Close operating software.
3. Turn off power switch
4. Remove all device
5. Pull out power cable

Scrap Computer Recycling

If the computer equipments need the maintenance or are beyond repair, we strongly recommended that you should inform us as soon as possible for the suitable solution. For the computers that are no longer useful or no longer work well, please contact us for recycling and we will make the proper arrangement.

The following AAEON branches all over the world are available for providing the service.

Taiwan Headquarters

Tel: 886-2-8919-1234

Fax: 886-2-8919-1056

URL: http://www.aaeon.com.tw

USA

AAEON Electronics Inc.

3 Crown Plaza, Hazlet, NJ 07730, USA

Tel: 1-732-203-9300

Fax: 1-732-203-9311

URL: http://www.aaeon.com

URL: http://www.aaeon.com.ar

URL: http://www.aaeon.com.br

Europe

AAEON Europe

Hoenbergstr. 7

65555 Limburg, Germany

Tel: 49 6431 5989-0

Fax: 49 6431 5989-11

URL: http://www.aaeon.de

Shanghai Office, China

AAEON Computer Technology Inc.

RM. B, 11F, Software Building,

No. 461, Hong Cao Rd,

Xu Hui Destrict, Shanghai, China

Tel: 86-21-6495-6800

Fax: 86-21-6495-3450

URL: http://www.aaeon.com.cn

Beijing Office, China

AAEON Computer Technology Inc.

Rm1401, No.12, Sun Garden

Da Zhong Si

Hai Dian Destrict

Beijing, China

Tel: 86-10-82111116

Fax: 86-10-82111119

URL: http://www.aaeon.com.cn

Chengdu Office, China

AAEON Computer Technology Inc.

Rm.A3, 22F, Times Digital Building

No.1, Section 4th, Renmin Nan Road

Chengdu, China

Tel: 86-28-86317171

Tel: 86-28-86317172

Tel: 86-28-86317173

Fax: 86-28-86317174

URL: http://www.aaeon.com.cn